APP'L	DATE	LVL	REVISION
	3/21/02	A	ECN: 253

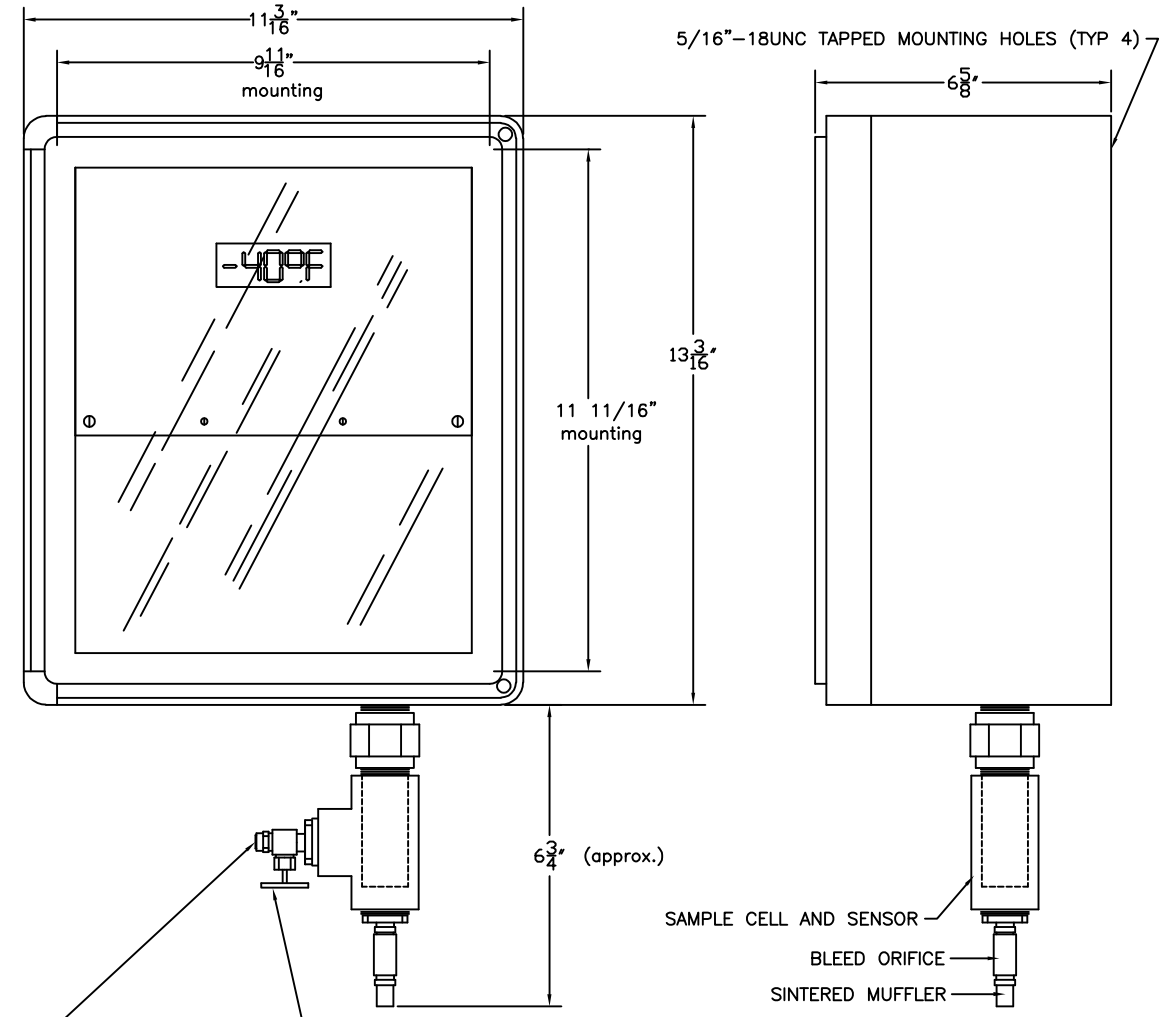

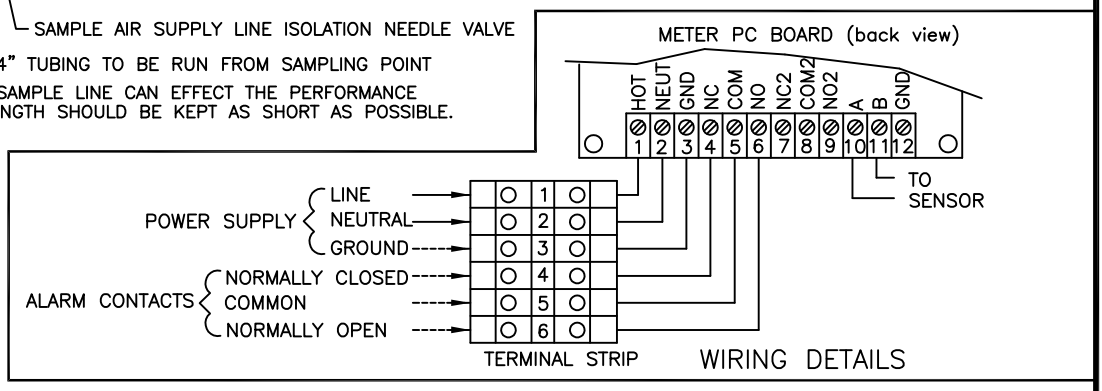

SPECIFICATIONS

DEW POINT RANGE.....−40°F TO +15°F (−40°C to −9°C)
ACCURACY.....±2°F
ALARM SET POINT.....−10°F (−23°C) (Adjustable)
REMOTE ALARM OUTPUT.....Normally Open and Closed Contacts 5A @ 115V rated
RECORDER OUTPUT.....4−20 mA or 0−5v (jumper selectable)
POWER REQUIREMENTS.....115VAC (±10%) 50/60Hz
POWER CONSUMPTION.....4 Watts
ENCLOSURE.....Nema 4, Fiberglass with clear window

INSTALLATION NOTES

1. UNIT MUST BE INSTALLED ON A SOLID SURFACE IN A SAFE LOCATION FREE FROM POSSIBLE DAMAGE.
2. CUSTOMER MUST SUPPLY AND INSTALL ALL INCOMMING POWER CONNECTIONS
3. CUSTOMER MUST SUPPLY AND INSTALL SAMPLE AIR LINE.
4. ALL ALARM CONNECTIONS AND/OR APPLICATIONS ARE TO BE IN ACCORDANCE WITH MANUFACTURER'S INSTALLATION AND OPERATION INSTRUCTIONS

This drawing is the property of VAN AIR SYSTEMS INC and is subject to return upon request. It shall not be copied or duplicated in any manner and shall not be submitted to outside parties for examination without the consent of Van Air Systems Inc. It shall be used for reference to work under contract or proposals submitted by Van Air Systems Inc. only.

DEW POINT METER
P/N 46−2529

DRWN BY: j@c	DATE: 02/03/97	DRWG No. SD−13436	REV A
CHECKED:	SCALE: ———		
APPL:			

VAN AIR SYSTEMS INC
Lake City, PA 16423 (814)774−2631 Fax: 814/774−3482