APP'L	DATE	LVL	ECN

MATERIALS OF CONSTRUCTION:
HEADS: ANODIZED ALUMINUM
TUBE: FILAMENT WOUND GLASS/EPOXY
TIE RODS: GALVANIZED STEEL
GASKETS: BUNA–N

NOTES:
1) MAXIMUM FLOW RATE: 30 SCFM (AT 150 PSIG).
2) MAXIMUM WORKING PRESSURE: 200 PSIG.
3) DRYER MAXIMUM TEMPERATURE: 100°F.
4) DRYER WEIGHT (WITH 9# INITIAL FILL OF 1/8" ACTIVATED ALUMINA DESICCANT): 35 LBS.
5) DRYER COMES WITH INTERNAL AFTERFILTER (ACCESSED THROUGH FILL PORT).

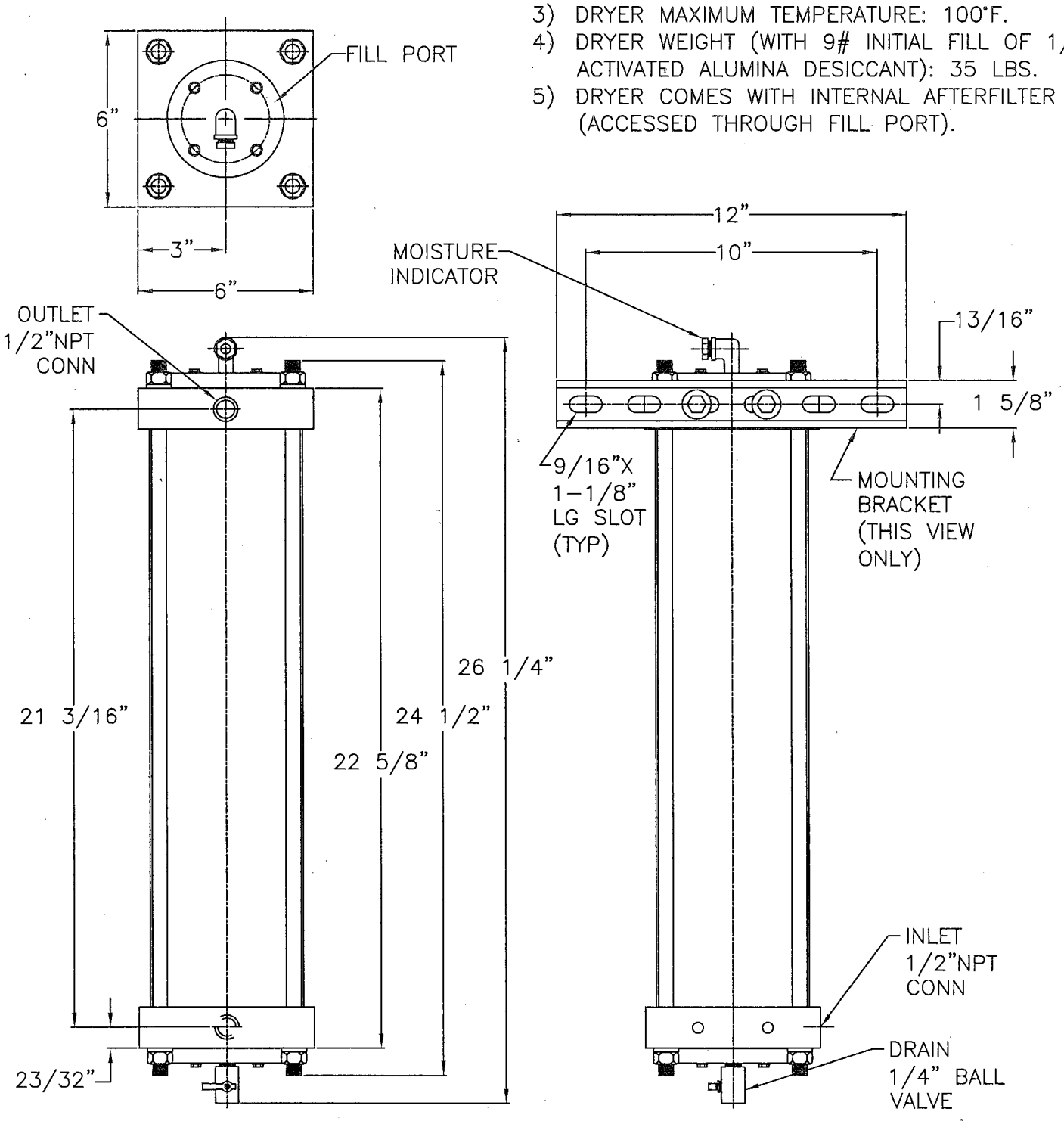

THIS DRAWING IS THE PROPERTY OF
VAN AIR INC.
AND IS SUBJECT TO RETURN UPON REQUEST. IT SHALL NOT BE COPIED OR DUPLICATED IN ANY MANNER AND SHALL NOT BE SUBMITTED TO OUTSIDE PARTIES FOR EXAMINATION WITHOUT THE CONSENT OF VAN AIR INC. IT SHALL BE USED FOR REFERENCE TO WORK UNDER CONTRACT OR PROPOSALS SUBMITTED BY VAN AIR INC. ONLY.

MOISTURE BLOCK ABSORBENT DRYER

PT#80-1576

DRWN BY: JMK	DATE: 07-21-17	DRWG No. SD–14816	REV
CHECKED: KLK	SCALE: NONE		
APP'L: KLK			

VAN AIR SYSTEMS
A DIVISION OF VAN AIR INC. LAKE CITY, PA 16423 (814)774-2631 FAX:(814)774-4065